Vertical LightBar Installation Instructions

BLAIR COMPANIES

ARCHITECTURAL IMAGING
SIGNS • FIXTURES • LIGHTING

PN: 45-02-27

Date: 11/21/18 I Rev #:

Safety Overview:
- If required, properly barricade the work area
- Follow all required safety precautions, including PPE
- Disable any applicable power before beginning work
- When lifting use proper rigging techniques such as use of spreader bars, etc. and only by a qualified person
- Before, during, and after any work occurs, make sure that the structural integrity of the area being worked on is not compromised
- If you notice any damage of concern inside or outside the specified scope of work, stop work and notify your Supervisor and call your contact at Blair Companies immediately!

General Overview:
- Sections may need trimmed in field
- See LightBar Installation Instructions for trimming steps and hardware callouts

Equipment/Materials Required:
- Bucket Truck/Man-lift
- Miter Saw (if trimming)

Pre-Inspection:
-

BLAIR COMPANIES
ARCHITECTURAL IMAGING
SIGNS • FIXTURES • LIGHTING

5107 Kissell Ave.
Altoona, PA 16601

P: 814.949.8287

F: 814.949.8293

blaircompanies.com

PRODUCT INFORMATION

This original design is the sole property of Blair Companies. It cannot be reproduced, copied or exhibited, in whole or in part, without first obtaining written consent from Blair Companies.

STEP 1

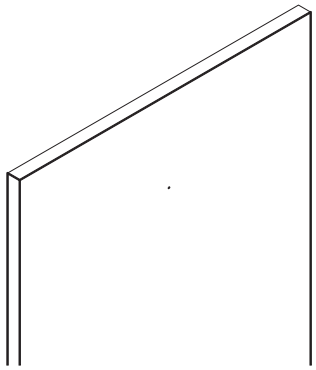

1) Locate approved LightBar position
2) Drill a 3/16” hole 9” from the top edge of the LightBar

STEP 2

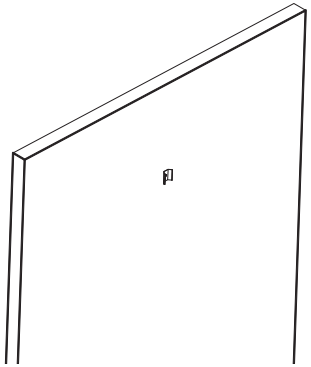

1) Fasten clips to the surface at specified distances according to LightBar Installation Instructions with specified hardware

STEP 3

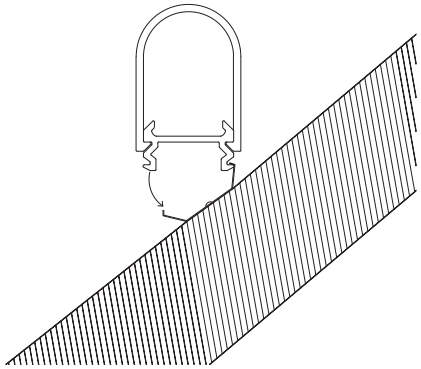

1) Seat one edge of the LightBar into the mounting clip and rotate into position until the opposite edge snaps into place.
2) Make sure that LightBar is seated in all mounting clips

STEP 4

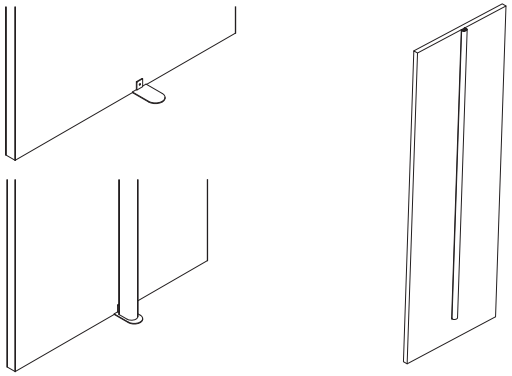

1) Slide LightBar up/down until in the approved location
2) Install the stop bracket on the bottom of the LightBar to prevent slipping

This original design is the sole property of Blair Companies. It cannot be reproduced, copied or exhibited, in whole or in part, without first obtaining written consent from Blair Companies.

BLAIR COMPANIES
ARCHITECTURAL IMAGING
SIGNS • FIXTURES • LIGHTING

5107 Kissell Ave.
Altoona, PA 16601

P: 814.949.8287

F: 814.949.8293

blaircompanies.com

PRODUCT INFORMATION