# Double Cabinet Single Face Center Pole Installation Instructions

BLAIR COMPANIES

ARCHITECTURAL IMAGING
SIGNS • FIXTURES • LIGHTING

PN: 45-02-24

Date: 11/6/18 I Rev:

Safety Overview:
- If required, properly barricade the work area
- Follow all required safety precautions, including PPE
- Disable any applicable power before beginning work
- When lifting use proper rigging techniques such as use of spreader bars, etc. and only by a qualified person
- Before, during, and after any work occurs, make sure that the structural integrity of the area being worked on is not compromised
- If you notice any damage of concern inside or outside the specified scope of work, stop work and notify your Supervisor and call your contact at Blair Companies immediately!

General Overview:
- Cabinets can have an external or internal frame system

Equipment/Materials Required:
- Bucket Truck/Man Lift
- Crane/Hoist
- Welder/Torch
- Drill Bits
- Touch up paint

Pre-Inspection:
- Inspect any existing poles, wiring, mounting points for rust/wear that would compromise the structural integrity of the sign

BLAIR COMPANIES
ARCHITECTURAL IMAGING
SIGNS • FIXTURES • LIGHTING

5107 Kissell Ave.
Altoona, PA 16601

P: 814.949.8287

F: 814.949.8293

blaircompanies.com

PRODUCT INFORMATION

This original design is the sole property of Blair Companies. It cannot be reproduced, copied or exhibited, in whole or in part, without first obtaining written consent from Blair Companies.

# INSTALLATION INSTRUCTIONS

## STEP 1

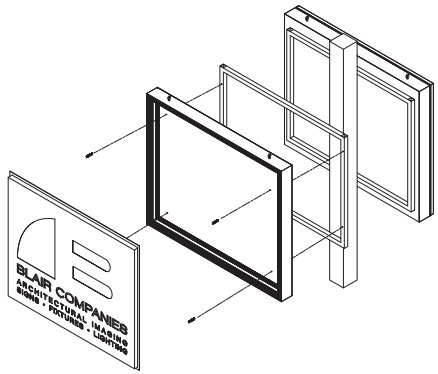


1) Frame can be internal or external
2) Mount frame/cabinet to pole by welding or bolting to the pole
   a) Angle may be needed to secure frame to pole
   b) If welding, be sure to paint any exposed metal

## STEP 2

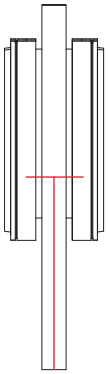

1) Wire individual cabinets to main wiring harness
2) Be sure to use grommets to protect wiring

## STEP 3

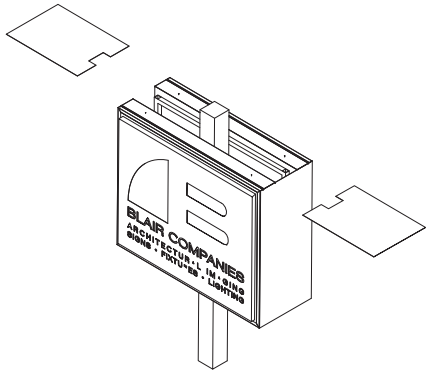


1) Attach cladding to exterior of cabinets
2) Attach using TEK screws or rivets

## STEP 4

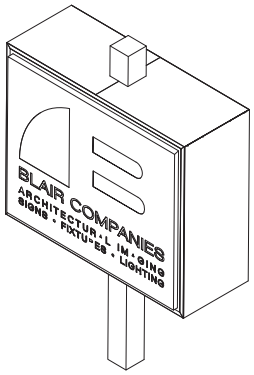


1) Power on sign to confirm function
2) Wipe down faces avoiding scratches
3) Take completion photos

BLAIR COMPANIES
ARCHITECTURAL IMAGING
SIGNS • FIXTURES • LIGHTING

5107 Kissell Ave.
Altoona, PA 16601

P: 814.949.8287

F: 814.949.8293

blaircompanies.com

**PRODUCT INFORMATION**

This original design is the sole property of Blair Companies. It cannot be reproduced, copied or exhibited, in whole or in part, without first obtaining written consent from Blair Companies.