Section Sign Installation Instructions

BLAIR COMPANIES

ARCHITECTURAL IMAGING

SIGNS • FIXTURES • LIGHTING

PN: 45-02-17

Date: 10/19/18 I Rev #

Safety Overview:
- If required, properly barricade the work area
- Follow all required safety precautions, including PPE
- Disable any applicable power before beginning work
- When lifting use proper rigging techniques such as use of spreader bars, etc. and only by a qualified person
- Before, during, and after any work occurs, make sure that the structural integrity of the area being worked on is not compromised
- If you notice any damage of concern inside or outside the specified scope of work, stop work and notify your Supervisor and call your contact at Blair Companies immediately!

General Overview:
- A section sign is a self-enclosed sign that shares wiring with another self-enclosed sign
- Wiring can be daisy-chained from sign to sign or to a shared junction box, such as a power supply housing
- Verify with your Blair contact that you have the approved layout so each sign is orientated properly
- Section signs can vary in size, shape, and style
- Mounting can vary from sign to sign, see the next page for typical mounting details

Equipment/Materials Required:
- Man Lift, if elevated
- Crane/Hoist, depending on size/weight of cabinet
- Electrical Hardware
- Mounting Hardware

Pre-Inspection:
- Plan for Power Supply housing location, if applicable
- Make sure sufficient structure is present to mount cabinets

BLAIR COMPANIES
ARCHITECTURAL IMAGING
SIGNS • FIXTURES • LIGHTING

5107 Kissell Ave.
Altoona, PA 16601

P: 814.949.8287

F: 814.949.8293

blaircompanies.com

PRODUCT INFORMATION

This original design is the sole property of Blair Companies. It cannot be reproduced, copied or exhibited, in whole or in part, without first obtaining written consent from Blair Companies.

Option 1

Mounting Angle

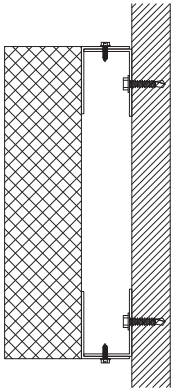

1) Mount supplied angle to surface at specified spacing
2) Attach cabinet to mounting angle

Option 2

Nutsert

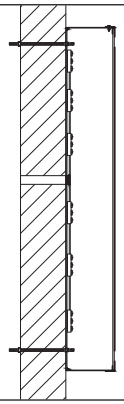

1) Use supplied pattern to drill holes into mounting surface
2) Thread studs into nutserts on back of sign
3) Mount cabinet to wall, use nut on backside to fasten cabinet
   a) Additional blocking may be required

Option 3

Face Removal

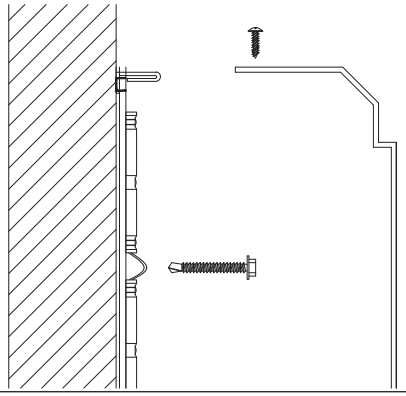

1) Use supplied pattern to mark and/or drill holes in mounting surface
2) Carefully remove face from cabinet
3) Fasten cabinet to mounting surface
4) Reattach face

Option 4

Tabs/ Thru Bolt

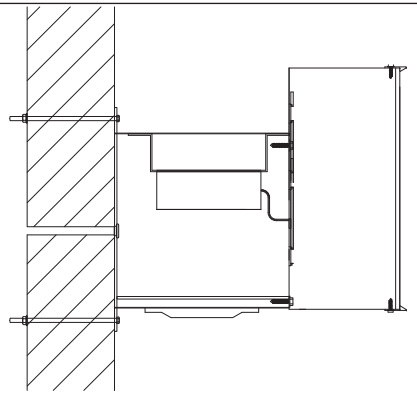

1) Use supplied pattern to drill holes into mounting surface
2) Use tabs to thru bolt cabinet to surface
   a) additional blocking may be required for structural support

This original design is the sole property of Blair Companies. It cannot be reproduced, copied or exhibited, in whole or in part, without first obtaining written consent from Blair Companies.

BLAIR COMPANIES
ARCHITECTURAL IMAGING
SIGNS • FIXTURES • LIGHTING

5107 Kissell Ave.
Altoona, PA 16601

P: 814.949.8287

F: 814.949.8293

blaircompanies.com

PRODUCT INFORMATION

STEP 1

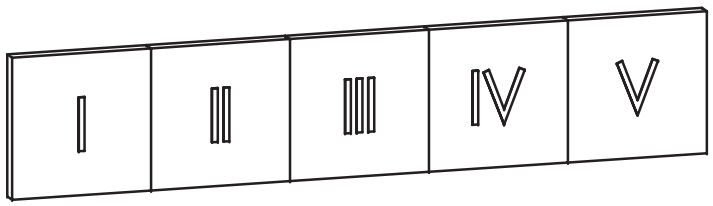

1) Mount each sign section according to its specific method mentioned on the previous page
   a) Make sure to orient the signs in their approved layout

STEP 2

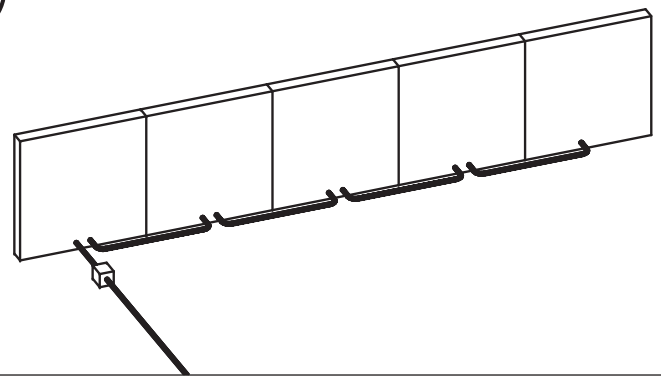

1) If sign is meant to be Daisy Chained, run power from sign to sign as shown

STEP 3

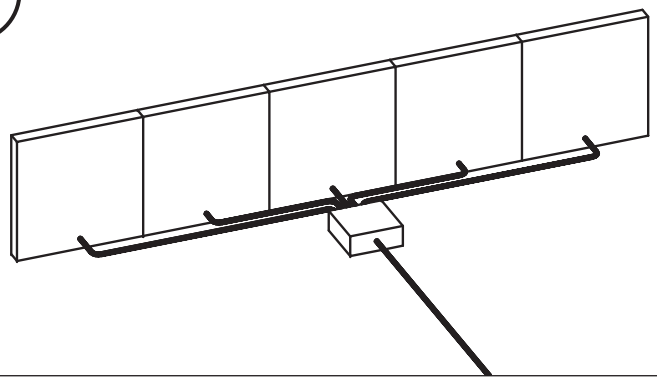

1) If using a remote power box, run wiring from supply housing to each sign individually

STEP 4

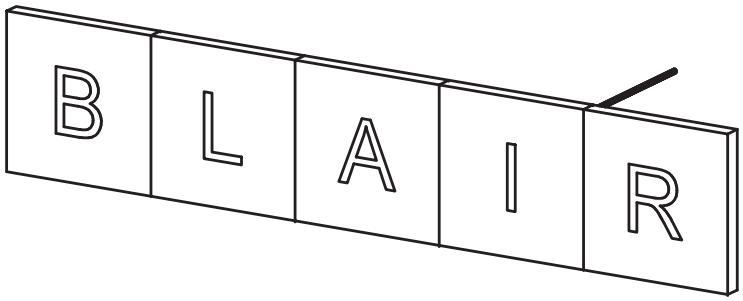

1) Power on sign to confirm proper function
2) Carefully wipe down faces while avoiding scratches
3) Take completion photos

This original design is the sole property of Blair Companies. It cannot be reproduced, copied or exhibited, in whole or in part, without first obtaining written consent from Blair Companies.

BLAIR COMPANIES
ARCHITECTURAL IMAGING
SIGNS • FIXTURES • LIGHTING

5107 Kissell Ave.
Altoona, PA 16601

P: 814.949.8287

F: 814.949.8293

blaircompanies.com

PRODUCT INFORMATION