Goalpost Cabinet with Shoes Installation Instructions

BLAIR COMPANIES

ARCHITECTURAL IMAGING
SIGNS • FIXTURES • LIGHTING

PN: 45-02-14

Date: 8/21/18 I Rev #

Safety Overview:
-If required, properly barricade the work area
-Follow all required safety precautions, including PPE
-Disable any applicable power before beginning work
-When lifting use proper rigging techniques such as use of spreader bars, etc. and only by a qualified person
-Before, during, and after any work occurs, make sure that the structural integrity of the area being worked on is not compromised
-If you notice any damage of concern inside or outside the specified scope of work, stop work and notify your Supervisor and call your contact at Blair Companies immediately!

General Overview:
-Poles could be existing or new
-Always make sure that power has been disconnected to the sign before beginning work

Equipment/Materials Required:
-Bucket truck
-Crane
-Welder/Torch

Pre-Inspection:
-Look for rust on any existing poles that would affect structural integrity
-Make sure all anchor bolts are in good condition and the nuts are tight
-Non-shrink grout should be present and in good condition between base plate and foundation
-Make sure that cabinets are oriented per approval, with consideration to primary traffic flow

BLAIR COMPANIES
ARCHITECTURAL IMAGING
SIGNS • FIXTURES • LIGHTING

5107 Kissell Ave.
Altoona, PA 16601

P: 814.949.8287

F: 814.949.8293

blaircompanies.com

PRODUCT INFORMATION

This original design is the sole property of Blair Companies. It cannot be reproduced, copied or exhibited, in whole or in part, without first obtaining written consent from Blair Companies.

STEP 1

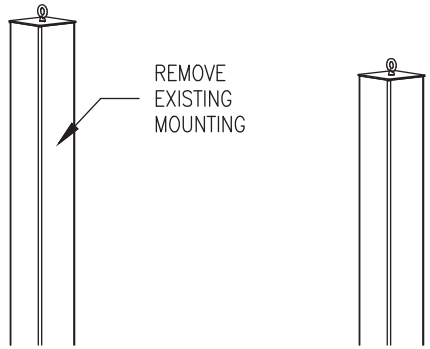

1) Make sure that power has been disconnected from the sign before beginning work
2) Remove the existing cabinet
3) Remove any existing mounting points from the poles
4) Remove any paint/debris from the poles where welding will occur

STEP 2

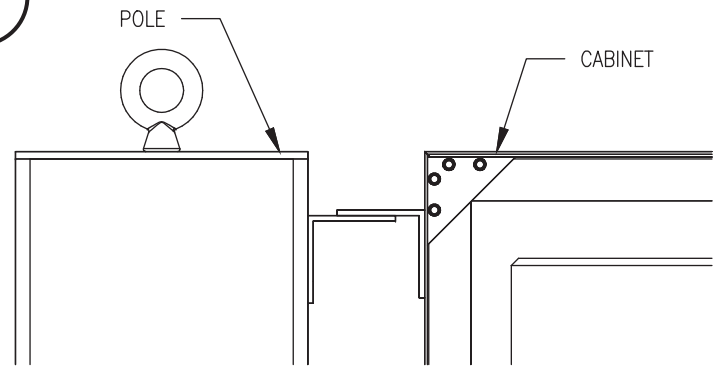

1) Measure the spacing of the shoes on the cabinet
2) Weld the shoes to the poles so that the cabinet shoes will sit atop the pole shoes in all locations
3) Touch up the poles with paint to prevent rusting at welded areas
   a) Paint should match existing color as close as possible

STEP 3

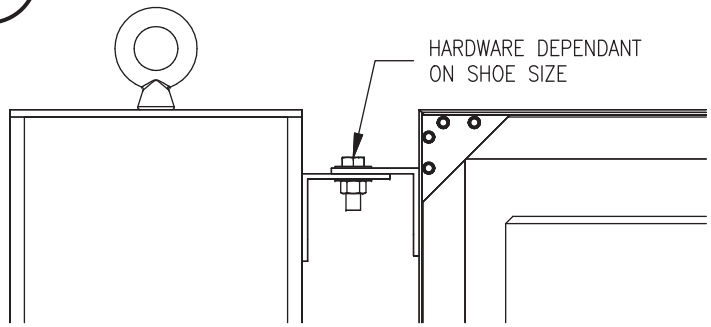

1) If face is removable, remove before hoisting into place. If hinged, keep closed until cabinet is hoisted into place
2) Electrical service hole can be drilled on the ground or in the air
3) Use rigging points and an approved rigging method to lift the cabinet into place atop the pole shoes
4) Connect the cabinet to the pole with supplied hardware

STEP 4

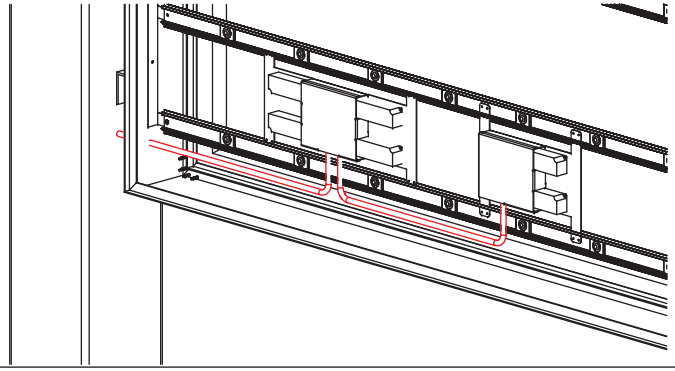

1) Attach the cabinet to the main AC power
2) Re-attach or close and fasten the face
3) Wipe down the face with a clean rag, making sure not to scratch it
4) Power the sign on to confirm proper function
5) Take completion photos lit and unlit

This original design is the sole property of Blair Companies. It cannot be reproduced, copied or exhibited, in whole or in part, without first obtaining written consent from Blair Companies.

BLAIR COMPANIES
ARCHITECTURAL IMAGING
SIGNS • FIXTURES • LIGHTING

5107 Kissell Ave.
Altoona, PA 16601

P: 814.949.8287

F: 814.949.8293

blaircompanies.com

PRODUCT INFORMATION